GARDNER DENVER®

300THD997 Rev D
February, 2009

WELL SERVICING PUMP

MODEL

HD-2250
C-2250
D-2250
TRIPLEX PUMPS

GWS FLUID END PARTS LIST

Gardner Denver

ECN 1044569

GWS FLUID END PARTS LIST
FOR
HD-2250, C-2250, D-2250
WELL SERVICING PUMPS

MAINTAIN PUMP RELIABILITY AND PERFORMANCE WITH GENUINE GARDNER DENVER PARTS AND SUPPORT SERVICES

Gardner Denver® genuine pump parts are manufactured to design tolerances and are developed for optimum dependability. Design and material innovations are the result of years of experience with hundreds of different pump applications. Reliability in materials and quality assurance is incorporated in our genuine replacement parts.

Your authorized Gardner Denver Sales Office offers all the backup you'll need. The Fort Worth Manufacturing Facility maintains a large inventory of genuine parts.

Gardner Denver supports your needs with these services:

1. Trained parts specialists to assist you in selecting the correct replacement parts.
2. Repair and maintenance kits designed with the necessary parts to simplify servicing your pump.

Authorized service technicians are factory trained and skilled in pump maintenance and repair. They are ready to respond and assist you by providing fast, expert maintenance and repair services.

For the location of your local authorized Gardner Denver distributor, refer to the yellow pages of your phone directory or contact:

Factory (Tulsa):
Gardner Denver Well Servicing Pumps
4747 South 83rd East Avenue
Tulsa, Oklahoma 74145

Phone: (918) 664-1151
(800) 637-8099

Fax: (918) 664-6225

Service Center (Odessa):
Chaparral
2121 West 44th Street
Odessa, Tx 79768

Phone: (432) 366-5433
(800) 368-1134

Fax: (432) 363-9940

Service Center (Ft. Worth):
Geoquip
7533 Kathy Lane
Ft. Worth, Texas 76126

Phone: (817) 249-6400
(800) 824-0271

Fax: (817) 249-6401

INSTRUCTIONS FOR ORDERING REPAIR PARTS

When ordering parts, specify Pump MODEL and SERIAL NUMBER (see nameplate on unit). The Serial Number is also stamped on top of the cylinder end of the frame (cradle area).

All orders for Parts should be placed with the Tulsa or Ft. Worth facility.

Where NOT specified, quantity of parts required per pump or unit is one (1); where more than one is required per unit, quantity is indicated in parenthesis. **SPECIFY EXACTLY THE NUMBER OF PARTS REQUIRED.**

TABLE OF CONTENTS

TABLE OF CONTENTS..... 1
3.75” GWS FLUID CYLINDER ASSEMBLY (FOPI)..... 2
4.5” GWS FLUID CYLINDER ASSEMBLY (EOPI) 4
5” GWS FLUID CYLINDER ASSEMBLY (HOPI) 6
5.5” GWS FLUID CYLINDER ASSEMBLY (IOPI)..... 8
6.5” GWS FLUID CYLINDER ASSEMBLY (UOPI)……..10
6.75” GWS FLUID CYLINDER ASSEMBLY (JOPI) 12
3.75” CDI ADJUSTABLE PACKING ASSEMBLY 14
4.5” CDI ADJUSTABLE PACKING ASSEMBLY 14
5.0” CDI ADJUSTABLE PACKING ASSEMBLY 14
5.5” CDI ADJUSTABLE PACKING ASSEMBLY 15
6.5” CDI ADJUSTABLE PACKING ASSEMBLY 15
6.75” CDI ADJUSTABLE PACKING ASSEMBLY 15
4.5" CDI NON-ADJUSTABLE PACKING ASSEMBLY 16
5.0" CDI NON-ADJUSTABLE PACKING ASSEMBLY 16
5.5" CDI NON-ADJUSTABLE PACKING ASSEMBLY 17
6.5" CDI NON-ADJUSTABLE PACKING ASSEMBLY 17
DISCHARGE PORT BUSHING & O-RINGS ASSEMBLY 18
BLIND DISCHARGE FLANGE ASSEMBLY 18
2” 1502 FEMALE DISCHARGE FLANGE ASSEMBLY 19
3” 1502 FEMALE DISCHARGE FLANGE ASSEMBLY 19
2” 2002 FEMALE DISCHARGE FLANGE ASSEMBLY 20
DISCHARGE BRIDLE ASSEMBLY 21
SUCTION MANIFOLD ASSEMBLY 23
GWS FLUID END SERVICE TOOLS 24

3.75” GWS FLUID CYLINDER ASSEMBLY (FOPI)

Order by part number and description. Reference numbers are for your convenience only.

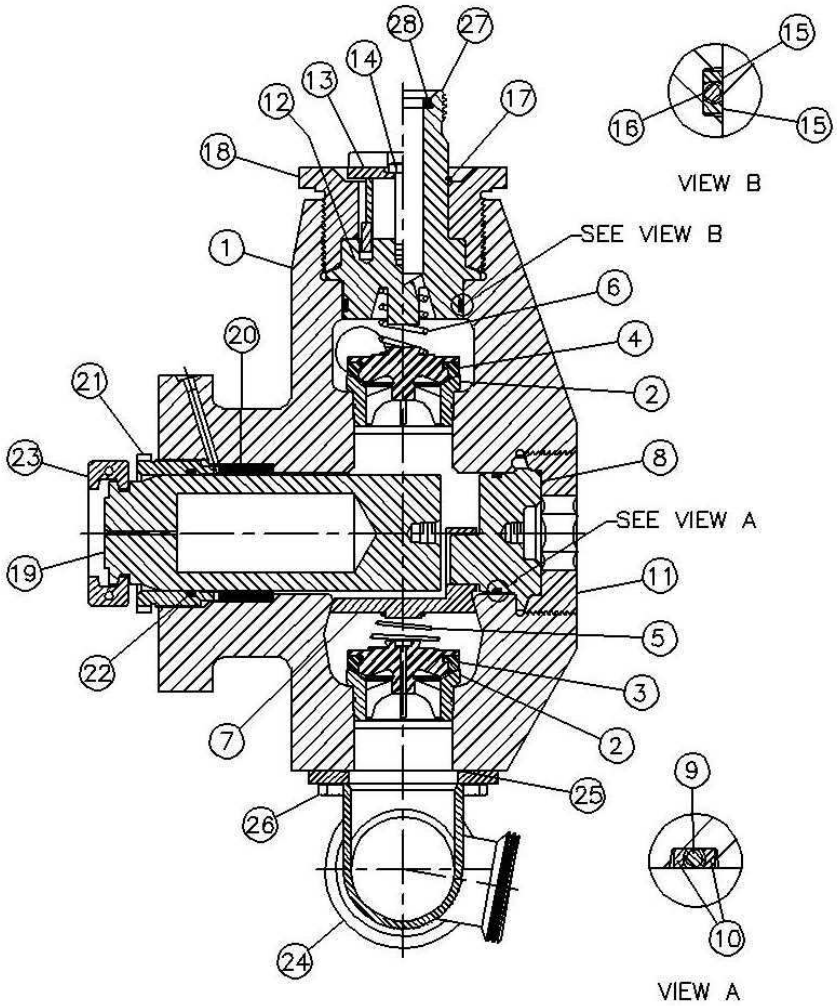

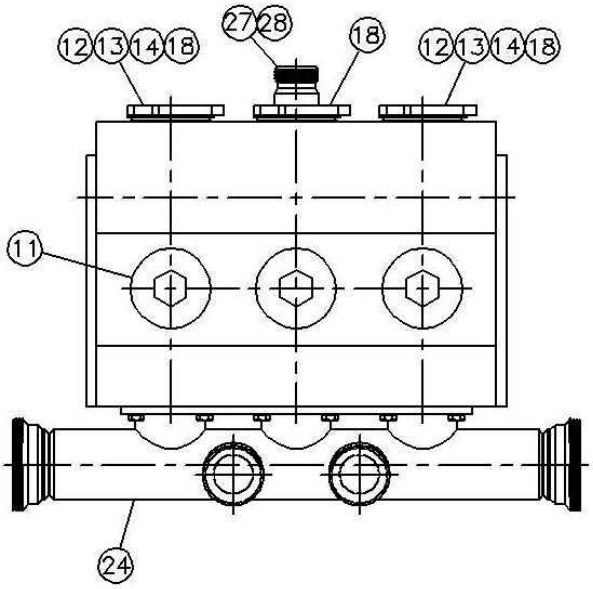

3.75” GWS FLUID CYLINDER ASSEMBLY (FOPI)

Order by part number and description. Reference numbers are for your convenience only.

Ref No.	Name of Part	Qty.	Part No.
1	Fluid Cylinder, 3.75” (FOPI)	1	PP1001456
2	Valve Seat (Suction and Discharge) – MacClatchie	6	511306000
	Valve Seat (Suction and Discharge) – Mission	6	VP1005731
	Valve Seat (Suction and Discharge) – Novatech	6	VP1005737
	(O-ring for Seats)	6	151790
3	Suction Valve with Burst Disc (22.5ksi) – MacClatchie	3	511555000
	Suction Valve with Burst Disc (22.5ksi) – Mission	3	VP1005730
	Suction Valve with Burst Disc (22.5ksi) – Novatech	3	VP1005733
3	Suction Valve – MacClatchie (No Burst Disc)	3	506471000
	Suction Valve – Mission (No Burst Disc)	3	VP1005729
	Suction Valve – Novatech (No Burst Disc)	3	VP1005732
4	Discharge Valve – MacClatchie	3	506471000
	Discharge Valve – Mission	3	VP1005729
	Discharge Valve – Novatech	3	VP1005732
5	Valve Spring – Suction	3	518532000
6	Valve Spring – Discharge	3	518532000
7	Spring Retainer – Suction	3	508894000
8	Suction Valve Cover	3	508893090
9	O-ring	3	107985
10	Back-up Ring (for Item 9)	6	25BC658
11	Retainer Nut – Suction Valve Cover	3	500260090
12	Discharge Valve Cover – Plain	2	433219090
13	Discharge Valve Cover Adapter	2	496168000
14	Screw – Cover Puller	2	496169000
15	Back-up Ring (for Item 16)	6	25BC658
16	O-ring	3	107985
17	Retainer Ring – Discharge Valve Cover with Gauge Connection	1	431640000
18	Retainer Nut – Discharge Valve Cover	3	431893090
19	Plunger	3	508895000
20	Packing Group (See Page 14)	3	
21	Packing Nut	3	457434000
22	Wiper Ring	3	60AM71
23	Plunger Clamp	3	302THD092
24	Suction Manifold (See Page 23)	1	522191000
25	O-ring	3	136236
26	Screw	12	75A237
27	Discharge Valve Cover – 2” 1502 Gauge Connection	1	433220090
	Discharge Valve Cover – 2” 2002 Gauge Connection	1	569088090
28	Seal – 2” 1502 Weco	1	901SH06-1
	Seal – 2” 2002 Weco	1	901SH06-4

4.5” GWS FLUID CYLINDER ASSEMBLY (EOPI)

Order by part number and description. Reference numbers are for your convenience only.

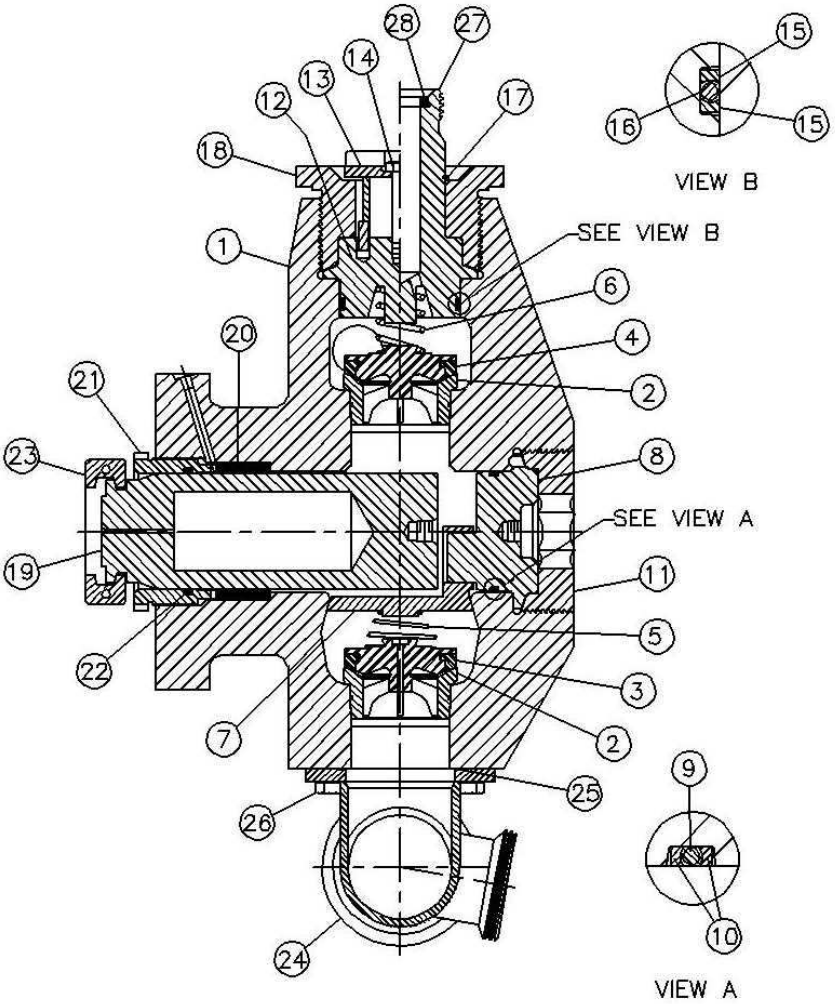

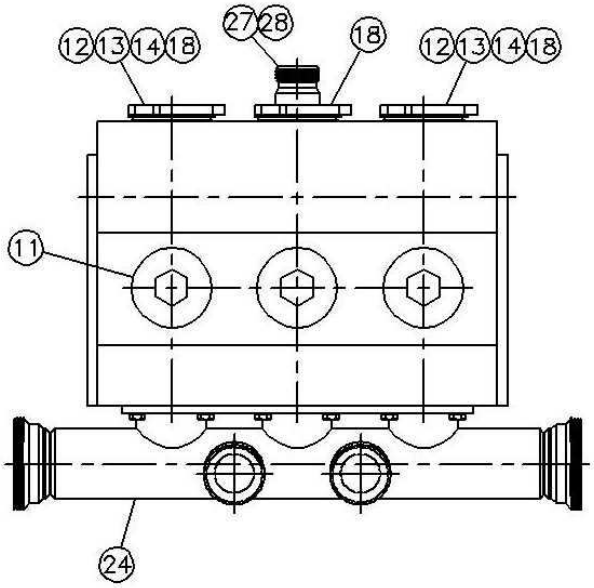

4.5” GWS FLUID CYLINDER ASSEMBLY (EOPI)

Order by part number and description. Reference numbers are for your convenience only.

Ref No.	Name of Part	Qty.	Part No.
1	Fluid Cylinder, 4.5” (EOPI)	1	PP1001454
2	Valve Seat (Suction and Discharge) – MacClatchie	6	511306000
	Valve Seat (Suction and Discharge) – Mission	6	VP1005731
	Valve Seat (Suction and Discharge) – Novatech	6	VP1005737
	(O-Ring for Seats)	6	151790
3	Suction Valve with Burst Disc (22.5ksi) – MacClatchie	3	511555000
	Suction Valve with Burst Disc (22.5ksi) – Mission	3	VP1005730
	Suction Valve with Burst Disc (22.5ksi) – Novatech	3	VP1005733
3	Suction Valve – MacClatchie (No Burst Disc)	3	506471000
	Suction Valve – Mission (No Burst Disc)	3	VP1005729
	Suction Valve – Novatech (No Burst Disc)	3	VP1005732
4	Discharge Valve – MacClatchie	3	506471000
	Discharge Valve – Mission	3	VP1005729
	Discharge Valve – Novatech	3	VP1005732
5	Valve Spring – Suction	3	518532000
6	Valve Spring – Discharge	3	518532000
7	Spring Retainer – Suction	3	508894000
8	Suction Valve Cover	3	508893090
9	O-ring	3	107985
10	Back-up Ring (for Item 9)	6	25BC658
11	Retainer Nut – Suction Valve Cover	3	500260090
12	Discharge Valve Cover – Plain	2	433219090
13	Discharge Valve Cover Adapter	2	496168000
14	Screw – Cover Puller	2	496169000
15	Back-up Ring (for Item 16)	6	25BC658
16	O-ring	3	107985
17	Retainer Ring – Discharge Valve Cover with Gauge Connection	1	431640000
18	Retainer Nut – Discharge Valve Cover	3	431893090
19	Plunger	3	512893000
20	Packing Group (See Page 14,16)	3	
21	Packing Nut	3	512890000
22	Wiper Ring	3	60AM73
23	Plunger Clamp	3	342-C-76
24	Suction Manifold (See Page 23)	1	522191000
25	O-ring	3	136236
26	Screw	12	75A237
27	Discharge Valve Cover – 2” 1502 Gauge Connection	1	433220090
28	Seal – 2” 1502 Weco	1	901SH06-1

5” GWS FLUID CYLINDER ASSEMBLY (HOPI)

Order by part number and description. Reference numbers are for your convenience only.

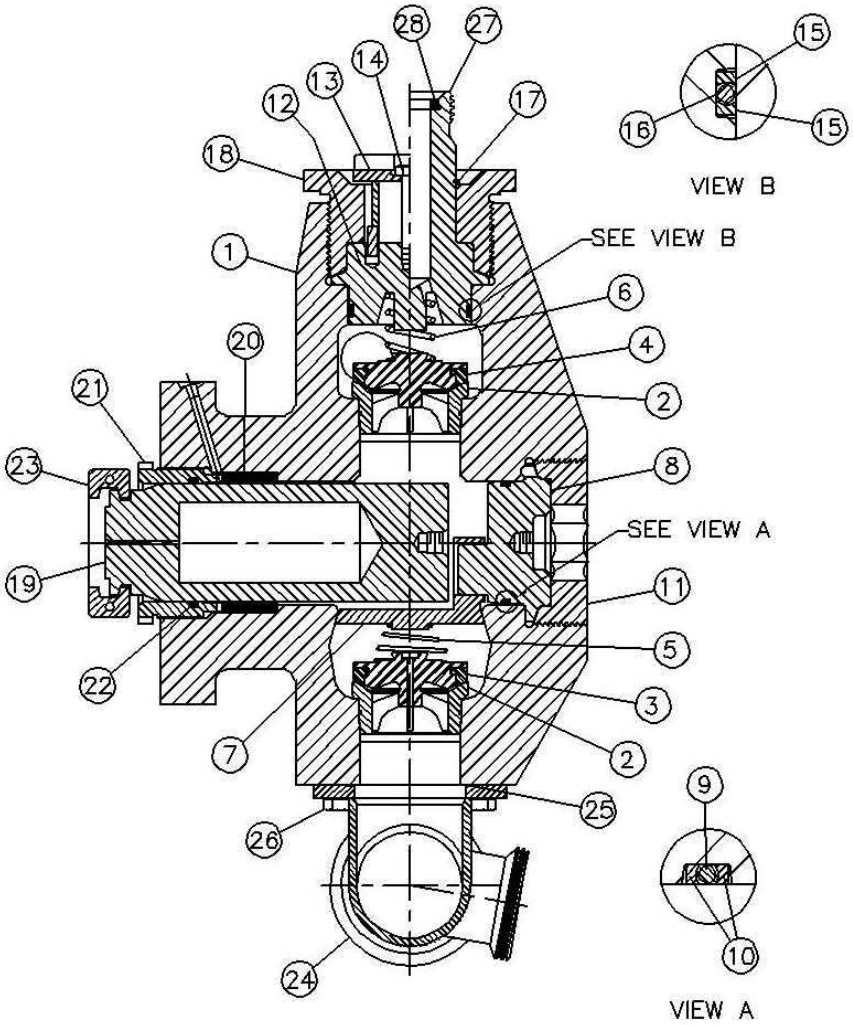

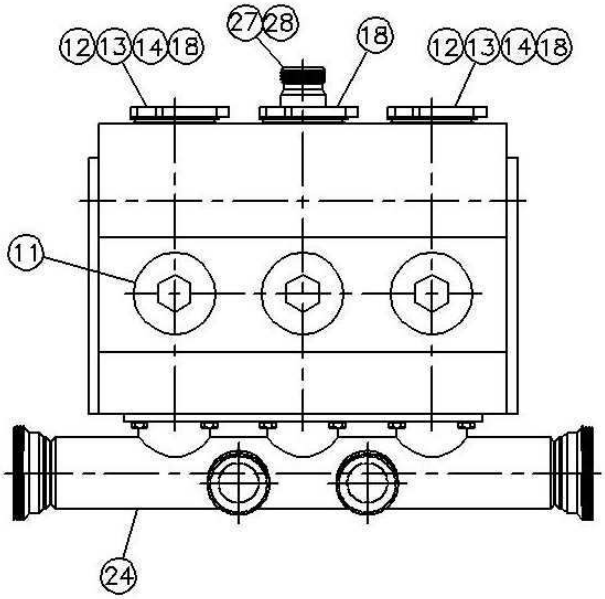

5” GWS FLUID CYLINDER ASSEMBLY (HOPI)

Order by part number and description. Reference numbers are for your convenience only.

Ref No.	Name of Part	Qty.	Part No.
1	Fluid Cylinder, 5” (HOPI)	1	PP1001455
2	Valve Seat (Suction and Discharge) – MacClatchie	6	510119000
	Valve Seat (Suction and Discharge) – Mission	6	VP1005731
	Valve Seat (Suction and Discharge) – Novatech	6	VP1005737
	(O-Ring for Seats)	6	151790
3	Suction Valve with Burst Disc (15ksi) – MacClatchie	3	511769000
	Suction Valve with Burst Disc (15ksi) – Mission	3	VP1005811
	Suction Valve with Burst Disc (15ksi) – Novatech	3	VP1005812
3	Suction Valve – MacClatchie (No Burst Disc)	3	510120000
	Suction Valve – Mission (No Burst Disc)	3	VP1005729
	Suction Valve – Novatech (No Burst Disc)	3	VP1005732
4	Discharge Valve – MacClatchie	3	510120000
	Discharge Valve – Mission	3	VP1005729
	Discharge Valve – Novatech	3	VP1005732
5	Valve Spring – Suction	3	518532000
6	Valve Spring – Discharge	3	518532000
7	Spring Retainer – Suction	3	520104000
8	Suction Valve Cover	3	508893090
9	O-ring	3	107985
10	Back-up Ring (for Item 9)	6	25BC658
11	Retainer Nut – Suction Valve Cover	3	515320090
12	Discharge Valve Cover – Plain	2	431897090
13	Discharge Valve Cover Adapter	2	496168000
14	Screw – Cover Puller	2	496169000
15	Back-up Ring (for Item 14)	6	25BC659
16	O-ring	3	162810
17	Retainer Ring – Discharge Valve Cover with Gauge Connection	1	431640000
18	Retainer Nut – Discharge Valve Cover	3	431893090
19	Plunger	3	478640000
20	Packing Group (See Page 14,16)	3	
21	Packing Nut	3	512845000
22	Wiper Ring	3	60AM74
23	Plunger Clamp	3	342-C-77
24	Suction Manifold (See Page 23)	1	522191000
25	O-ring	3	136236
26	Screw	12	75A237
27	Discharge Valve Cover – 2” 1502 Gauge Connection	1	431898090
28	Seal – 2” 1502 Weco	1	901SH06-1

5.5” GWS FLUID CYLINDER ASSEMBLY (IOPI)

Order by part number and description. Reference numbers are for your convenience only.

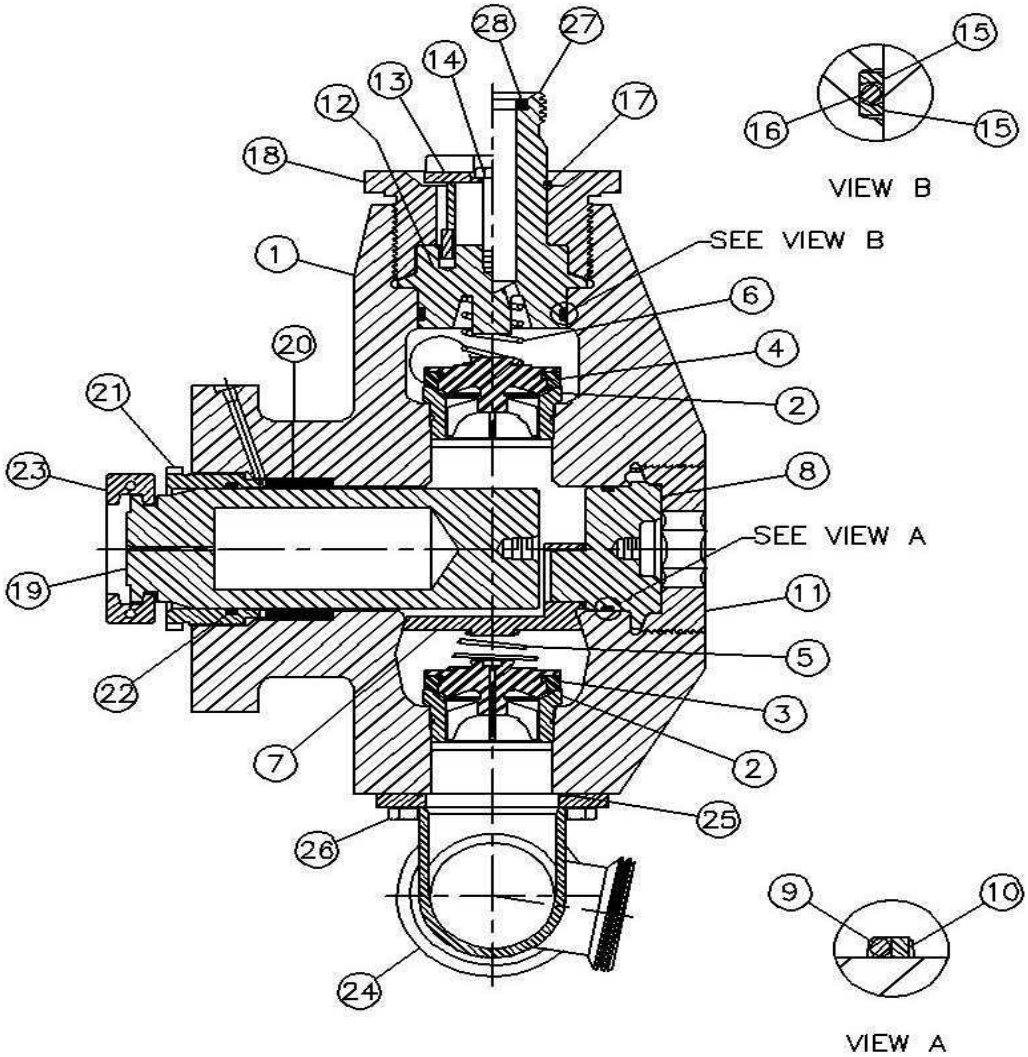

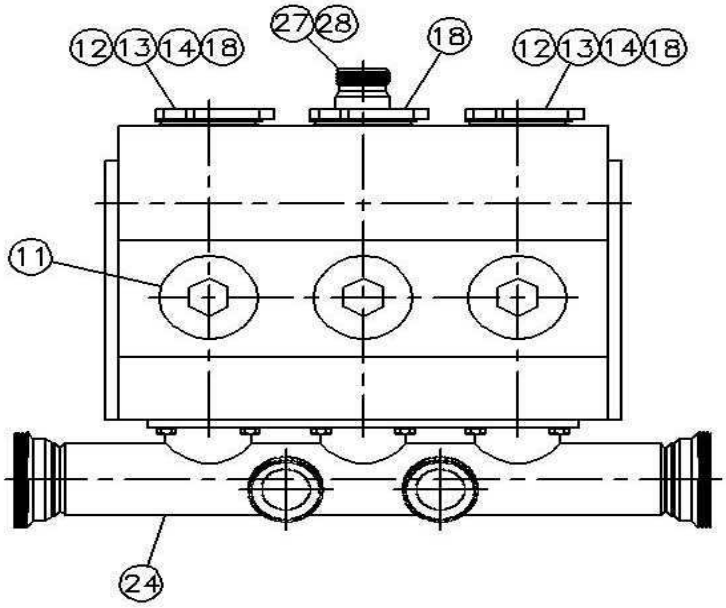

5.5” GWS FLUID CYLINDER ASSEMBLY (IOPI)

Order by part number and description. Reference numbers are for your convenience only.

Ref No.	Name of Part	Qty.	Part No.
1	Fluid Cylinder, 5.5” (IOPI)	1	302THD029
2	Valve Seat (Suction and Discharge) – MacClatchie	6	510119000
	Valve Seat (Suction and Discharge) – Mission	6	VP1005731
	Valve Seat (Suction and Discharge) – Novatech	6	VP1005737
	(O-Ring for Seats)	6	151790
3	Suction Valve with Burst Disc (15ksi) – MacClatchie	3	511769000
	Suction Valve with Burst Disc (15ksi) – Mission	3	VP1005811
	Suction Valve with Burst Disc (15ksi) – Novatech	3	VP1005812
3	Suction Valve – MacClatchie (No Burst Disc)	3	510120000
	Suction Valve – Mission (No Burst Disc)	3	VP1005729
	Suction Valve – Novatech (No Burst Disc)	3	VP1005732
4	Discharge Valve – MacClatchie	3	510120000
	Discharge Valve – Mission	3	VP1005729
	Discharge Valve – Novatech	3	VP1005732
5	Valve Spring – Suction	3	518532000
6	Valve Spring – Discharge	3	510118000
7	Spring Retainer – Suction	3	500291000
8	Suction Valve Cover	3	500261090
9	O-ring	3	162810
10	Back-up Ring (for Item 9)	3	25BC659
11	Retainer Nut – Suction Valve Cover	3	515320090
12	Discharge Valve Cover – Plain	2	512074090
13	Discharge Valve Cover Adapter	2	496168000
14	Screw – Cover Puller	2	496169000
15	Back-up Ring (for Item 14)	6	25BC659
16	O-ring	3	162810
17	Retainer Ring – Discharge Valve Cover with Gauge Connection	1	431640000
18	Retainer Nut – Discharge Valve Cover	3	431893090
19	Plunger	3	478658000
20	Packing Group (See Page 15,17)	3	
21	Packing Nut	3	500299000
22	Wiper Ring	3	60AM75
23	Plunger Clamp	3	342-C-77
24	Suction Manifold (See Page 23)	1	522191000
25	O-ring	3	136236
26	Screw	12	75A237
27	Discharge Valve Cover – 2” 1502 Gauge Connection	1	512073090
28	Seal – 2” 1502 Weco	1	901SH06-1

6.5” GWS FLUID CYLINDER ASSEMBLY (UOPI)

Order by part number and description. Reference numbers are for your convenience only.

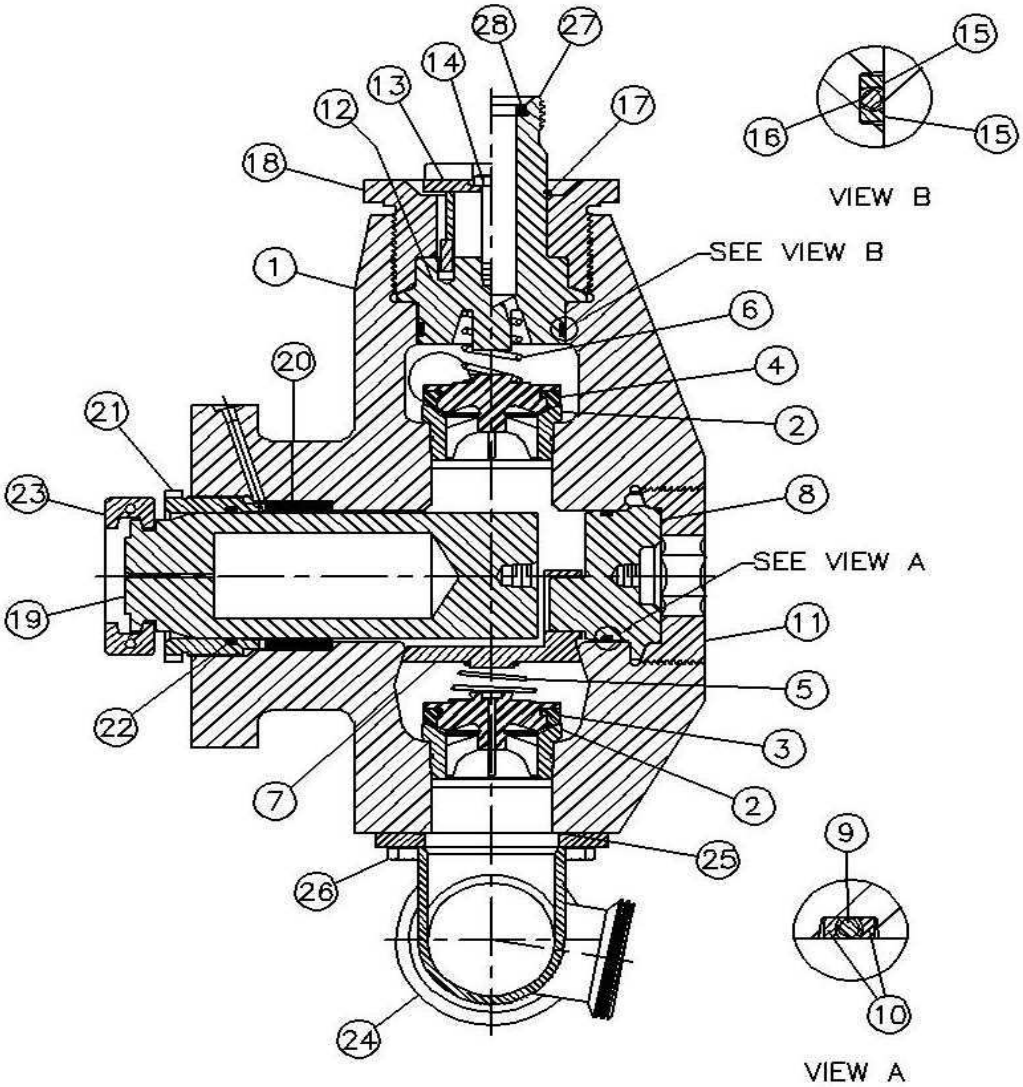

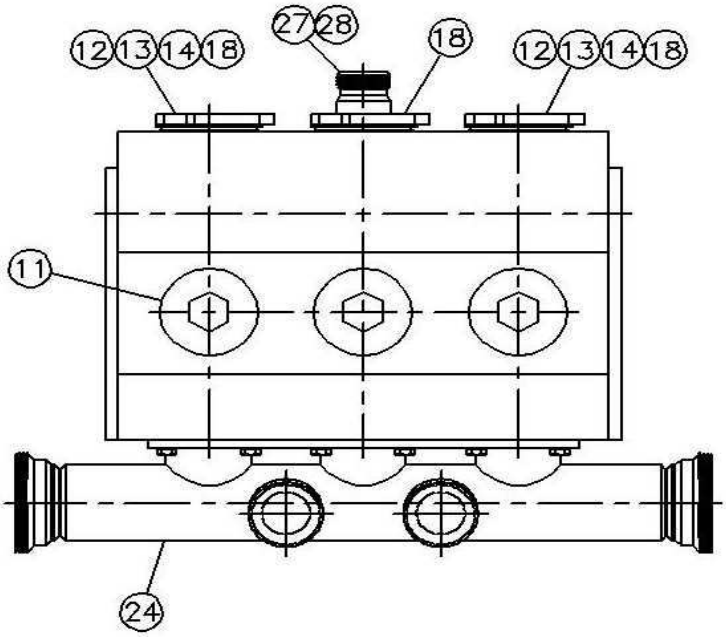

6.5” GWS FLUID CYLINDER ASSEMBLY (UOPI)

Order by part number and description. Reference numbers are for your convenience only.

Ref No.	Name of Part	Qty.	Part No.
1	Fluid Cylinder, 6.5” (UOPI)	1	PP1001430
2	Valve Seat (Suction and Discharge) – MacClatchie	6	300TWB039
	(O-Ring for Seats)	6	108513
3	Suction Valve with Burst Disc (10ksi) – MacClatchie	3	512057000
3	Suction Valve – MacClatchie (No Burst Disc)	3	512058000
4	Discharge Valve – MacClatchie	3	512058000
5	Valve Spring – Suction	3	439334000
6	Valve Spring – Discharge	3	PP1000846
7	Spring Retainer – Suction	3	513059000
8	Suction Valve Cover	3	PP1001980
9	O-ring	3	901SH05-441
10	Back-up Ring (for Item 9)	6	429276000
11	Retainer Nut – Suction Valve Cover	3	513058090
12	Discharge Valve Cover – Plain	2	PP1000671
13	Discharge Valve Cover Adapter	2	496168000
14	Screw – Cover Puller	2	496169000
15	Back-up Ring (for Item 14)	6	25BC663
16	O-ring	3	107992
17	Retainer Ring – Discharge Valve Cover with Gauge Connection	1	431640000
18	Retainer Nut – Discharge Valve Cover	3	431893090
19	Plunger	3	157PN001
20	Packing Group (See Page 15,17)	3	
21	Packing Nut	3	524504000
22	Wiper Ring	3	60AM77
23	Plunger Clamp	3	342-C-77
24	Suction Manifold (See Page 23)	1	522191000
25	O-ring	3	136236
26	Screw	12	75A237
27	Discharge Valve Cover – 2” 1502 Gauge Connection	1	PP1000672
28	Seal – 2” 1502 Weco	1	901SH06-1

6.75” GWS FLUID CYLINDER ASSEMBLY (JOPI)

Order by part number and description. Reference numbers are for your convenience only.

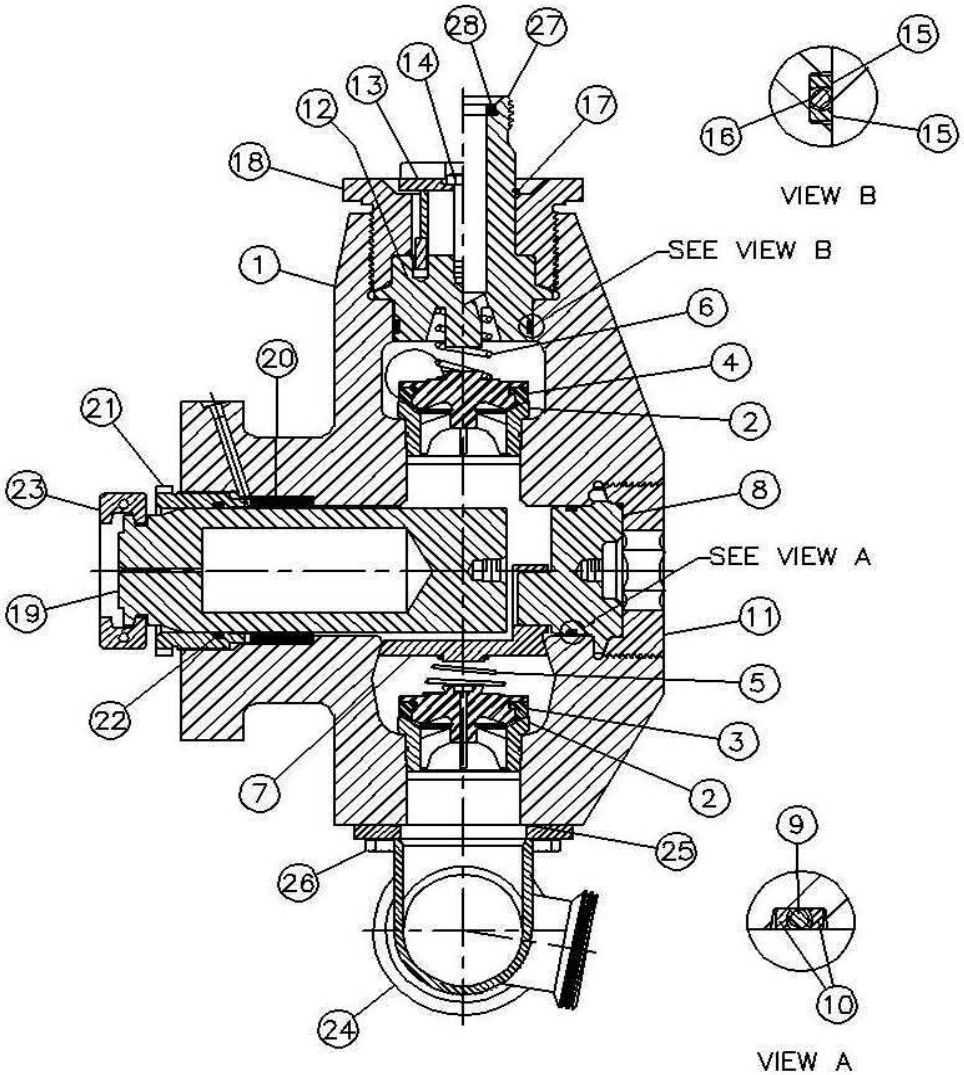

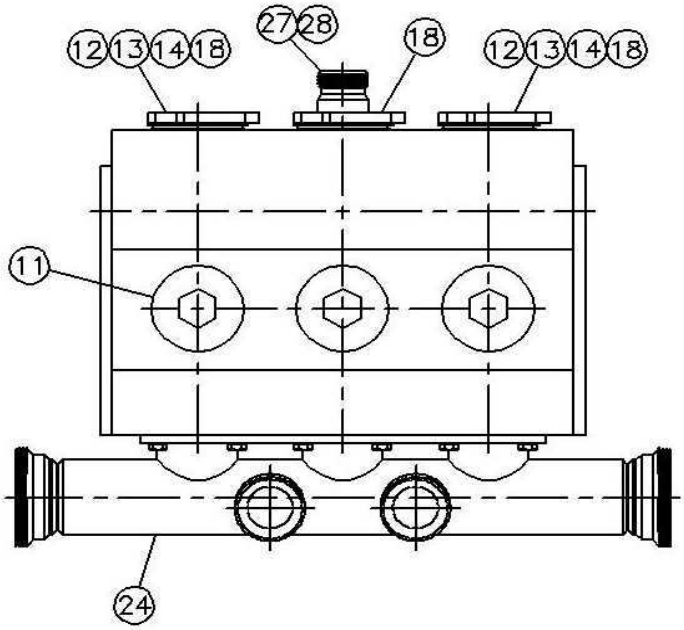

6.75” GWS FLUID CYLINDER ASSEMBLY (JOPI)

Order by part number and description. Reference numbers are for your convenience only.

Ref No.	Name of Part	Qty.	Part No.
1	Fluid Cylinder, 6.75” (JOPI)	1	PP1032474
2	Valve Seat (Suction and Discharge) – MacClatchie	6	300TWB039
	(O-Ring for Seats)	6	108513
3	Suction Valve with Burst Disc (10ksi) – MacClatchie	3	512057000
3	Suction Valve – MacClatchie (No Burst Disc)	3	512058000
4	Discharge Valve – MacClatchie	3	512058000
5	Valve Spring – Suction	3	439334000
6	Valve Spring – Discharge	3	PP1000846
7	Spring Retainer – Suction	3	513059000
8	Suction Valve Cover	3	PP1001980
9	O-ring	3	901SH05-441
10	Back-up Ring (for Item 9)	6	429276000
11	Retainer Nut – Suction Valve Cover	3	513058090
12	Discharge Valve Cover – Plain	2	PP1000671
13	Discharge Valve Cover Adapter	2	496168000
14	Screw – Cover Puller	2	496169000
15	Back-up Ring (for Item 14)	6	25BC663
16	O-ring	3	107992
17	Retainer Ring – Discharge Valve Cover with Gauge Connection	1	431640000
18	Retainer Nut – Discharge Valve Cover	3	431893090
19	Plunger	3	157PN008
20	Packing Group (See Page 15)	3	
21	Packing Nut	3	514036000
22	Wiper Ring	3	60AM78
23	Plunger Clamp	3	342-C-77
24	Suction Manifold (See Page 23)	1	522191000
25	O-ring	3	136236
26	Screw	12	75A237
27	Discharge Valve Cover – 2” 1502 Gauge Connection	1	PP1000672
28	Seal – 2” 1502 Weco	1	901SH06-1

CDI HNBR PACKING ASSEMBLY FOR GWS FLUID CYLINDERS

Order by part number and description. Reference numbers are for your convenience only

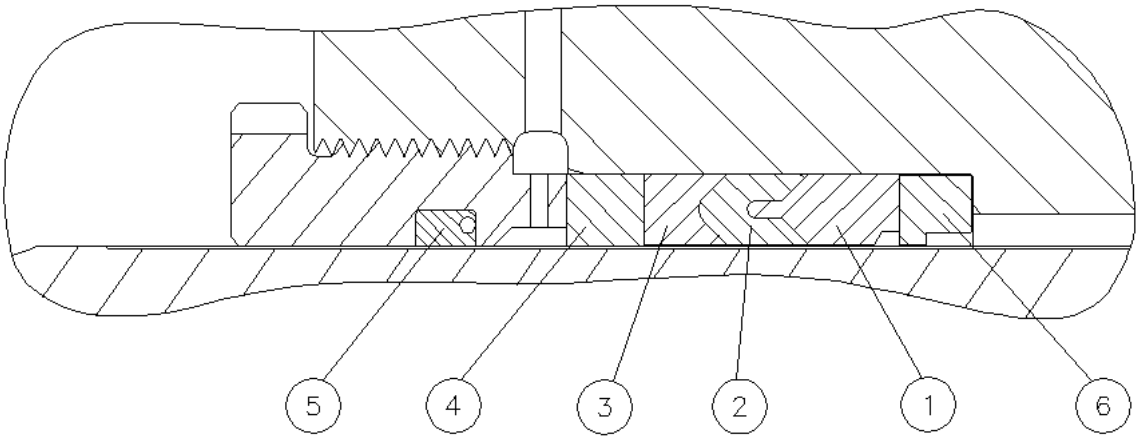

3.75” ADJUSTABLE PACKING ASSEMBLY
Complete Assembly Part Number: 595868000

Ref No.	Name of Part	Qty.	Part No.
1	HEADER RING, 3.75”	1	595703000
2	PRESSURE RING	1	595695000
3	FEMALE ADAPTER	1	595687000
4	LANTERN GLAND*	1	512061000
5	WIPER SEAL	1	60AM71
6	JUNK RING	1	300TWC317

*Lantern ring is NOT integrated into the packing nut in 3.75” assemblies.

4.5” ADJUSTABLE PACKING ASSEMBLY
Complete Assembly Part Number: 595668000

Ref No.	Name of Part	Qty.	Part No.
1	HEADER RING, 4.5”	1	595704000
2	PRESSURE RING	1	595696000
3	FEMALE ADAPTER	1	595688000
4	SPACER	1	595720000
5	WIPER SEAL	1	60AM73
6	JUNK RING	1	595737000

5.0” ADJUSTABLE PACKING ASSEMBLY
Complete Assembly Part Number: 595669000

Ref No.	Name of Part	Qty.	Part No.
1	HEADER RING, 5”	1	595705000
2	PRESSURE RING	1	595697000
3	FEMALE ADAPTER	1	595689000
4	SPACER	1	595721000
5	WIPER SEAL	1	60AM74
6	JUNK RING	1	595738000

CDI HNBR PACKING ASSEMBLY FOR GWS FLUID CYLINDERS

Order by part number and description. Reference numbers are for your convenience only.

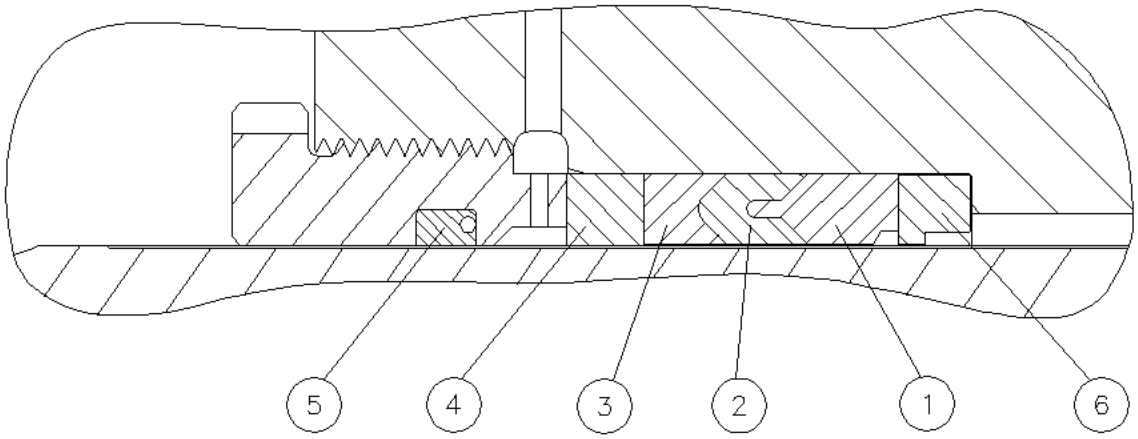

5.5” ADJUSTABLE PACKING ASSEMBLY
Complete Assembly Part Number: 595670000

Ref No.	Name of Part	Qty.	Part No.
1	HEADER RING, 5.5”	1	595706000
2	PRESSURE RING	1	595698000
3	FEMALE ADAPTER	1	595690000
4	SPACER	1	595723000
5	WIPER SEAL	1	60AM75
6	JUNK RING	1	595739000

6.5” ADJUSTABLE PACKING ASSEMBLY
Complete Assembly Part Number: 595671000

Ref No.	Name of Part	Qty.	Part No.
1	HEADER RING, 6.5”	1	595708000
2	PRESSURE RING	1	595700000
3	FEMALE ADAPTER	1	595692000
4	SPACER	1	595724000
5	WIPER SEAL	1	60AM77
6	JUNK RING	1	595740000

6.75” ADJUSTABLE PACKING ASSEMBLY
Complete Assembly Part Number: 595672000

Ref No.	Name of Part	Qty.	Part No.
1	HEADER RING, 6.75”	1	595709000
2	PRESSURE RING	1	595701000
3	FEMALE ADAPTER	1	595623000
4	SPACER	1	595725000
5	WIPER SEAL	1	60AM78
6	JUNK RING	1	595741000

CDI HNBR PACKING ASSEMBLY FOR GWS FLUID CYLINDERS

Order by part number and description. Reference numbers are for your convenience only.

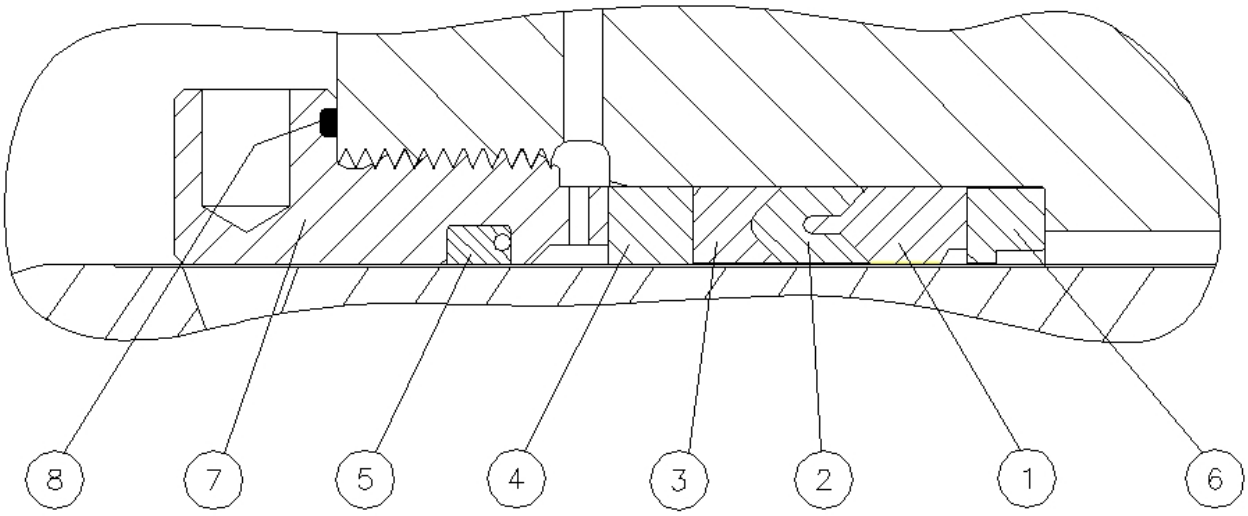

4.5” NON-ADJUSTABLE PACKING ASSEMBLY

Ref No.	Name of Part	Qty.	Part No.
1	HEADER RING, 4.5”	1	595704000
2	PRESSURE RING	1	595696000
3	FEMALE ADAPTER	1	595688000
4	SPACER	1	595720000
5	WIPER SEAL	1	60AM73
6	JUNK RING	1	595737000
7	GLAND	1	PP1041506
8	O-RING	1	136236

5.0” NON-ADJUSTABLE PACKING ASSEMBLY

Ref No.	Name of Part	Qty.	Part No.
1	HEADER RING, 5”	1	595705000
2	PRESSURE RING	1	595697000
3	FEMALE ADAPTER	1	595689000
4	SPACER	1	595721000
5	WIPER SEAL	1	60AM74
6	JUNK RING	1	595738000
7	GLAND	1	PP1041507
8	O-RING	1	901SH05-263

CDI HNBR PACKING ASSEMBLY FOR GWS FLUID CYLINDERS

Order by part number and description. Reference numbers are for your convenience only.

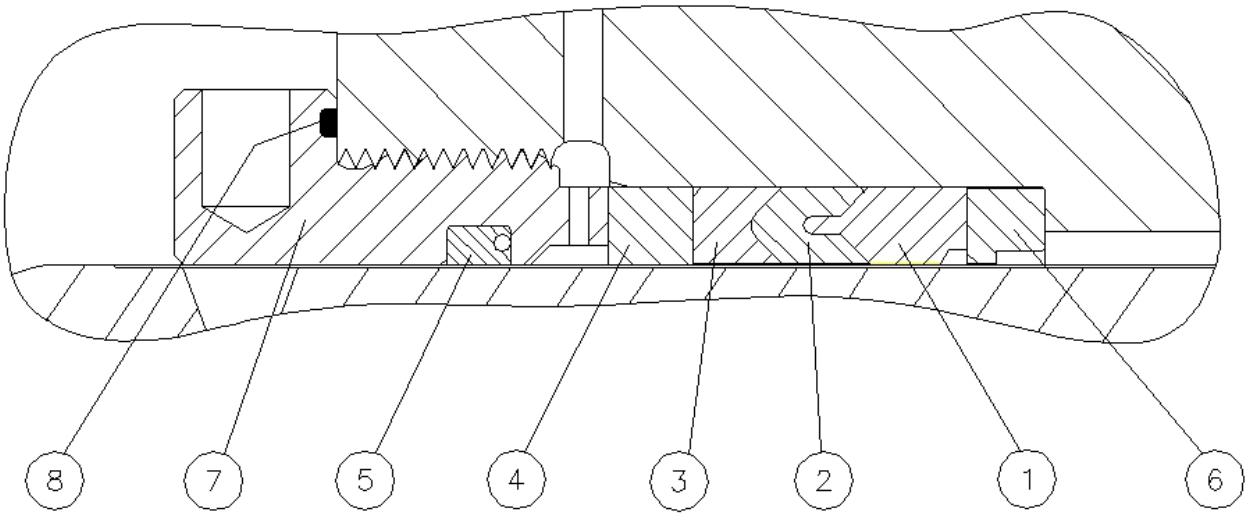

5.5” NON-ADJUSTABLE PACKING ASSEMBLY

Ref No.	Name of Part	Qty.	Part No.
1	HEADER RING, 5.5”	1	595706000
2	PRESSURE RING	1	595698000
3	FEMALE ADAPTER	1	595690000
4	SPACER	1	595723000
5	WIPER SEAL	1	60AM75
6	JUNK RING	1	595739000
7	GLAND	1	PP1041508
8	O-RING	1	901SH05-263

6.5” NON-ADJUSTABLE PACKING ASSEMBLY

Ref No.	Name of Part	Qty.	Part No.
1	HEADER RING, 6.5”	1	595708000
2	PRESSURE RING	1	595700000
3	FEMALE ADAPTER	1	595692000
4	SPACER	1	595724000
5	WIPER SEAL	1	60AM77
6	JUNK RING	1	595740000
7	GLAND	1	PP1041509
8	O-RING	1	108517

DISCHARGE PORT BUSHING & O-RINGS ASSEMBLY

(Used on all fluid ends)

Order by part number and description. Reference numbers are for your convenience only.

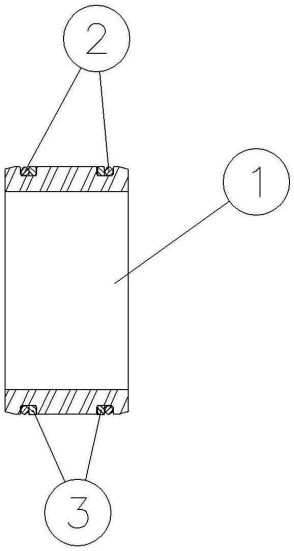

Assembly Part Number: 405TWC4038

Ref No.	Name of Part	Qty.	Part No.
1	Port Bushing	1	403400090
2	O-ring	2	169828
3	Back-up Ring (for Item 2)	2	429003000

BLIND DISCHARGE FLANGE ASSEMBLY

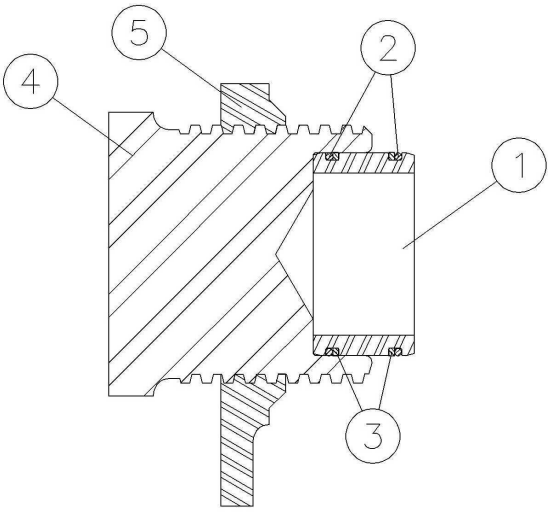

Assembly Part Number: 400TWC4038

Ref No.	Name of Part	Qty.	Part No.
1	Port Bushing	1	403400090
2	O-ring	2	169828
3	Back-up Ring (for Item 2)	2	429003000
4	Plug	1	403404090
5	Wing Nut	1	403403000

2” 1502 FEMALE DISCHARGE FLANGE ASSEMBLY

Order by part number and description. Reference numbers are for your convenience only.

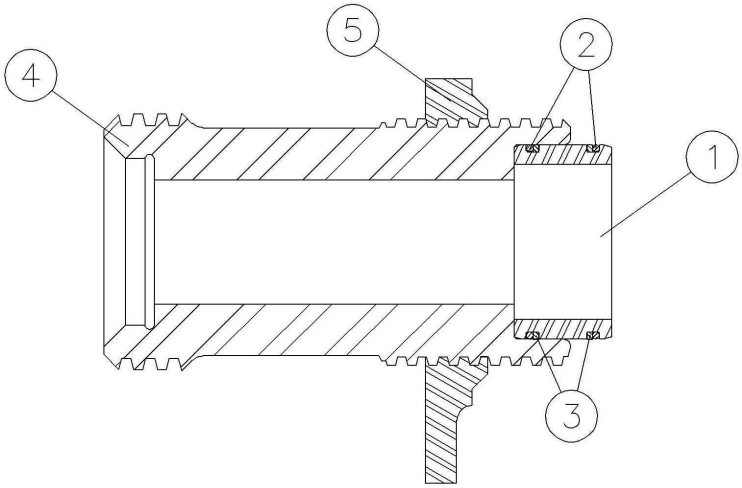

Assembly Part Number: 402TWC4038

Ref No.	Name of Part	Qty.	Part No.
1	Port Bushing	1	403400090
2	O-ring	2	169828
3	Back-up Ring (for Item 2)	2	429003000
4	2” 1502 Female Treating Adapter	1	479197090
5	Wing Nut	1	403403000

3” 1502 FEMALE DISCHARGE FLANGE ASSEMBLY

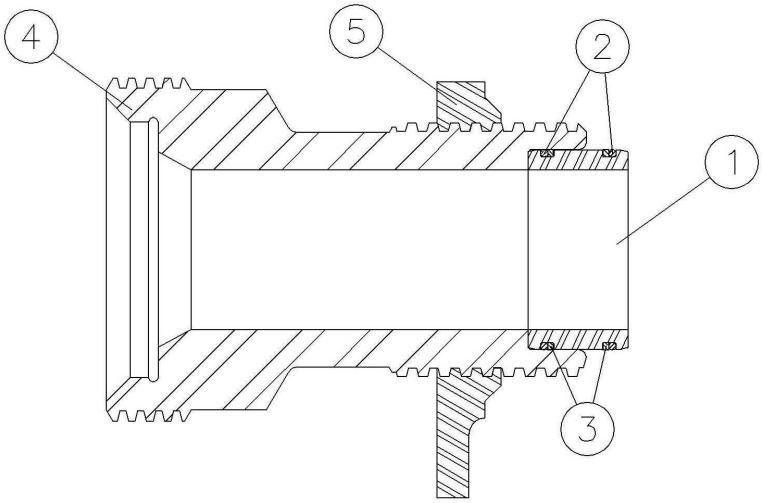

Assembly Part Number: 403TWC4038

Ref No.	Name of Part	Qty.	Part No.
1	Port Bushing	1	403400090
2	O-ring	2	169828
3	Back-up Ring (for Item 2)	2	429003000
4	3” 1502 Female Treating Adapter	1	520915090
5	Wing Nut	1	403403000

2” 2002 FEMALE DISCHARGE FLANGE ASSEMBLY

Order by part number and description. Reference numbers are for your convenience only.

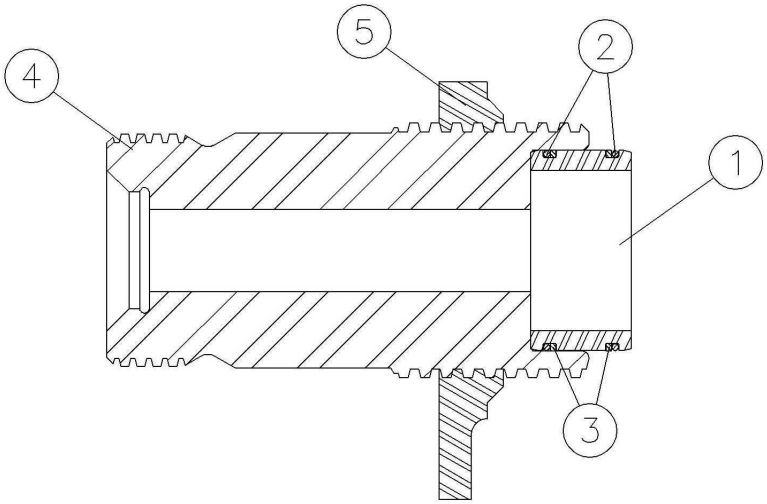

Assembly Part Number: 404TWC4038

Ref No.	Name of Part	Qty.	Part No.
1	Port Bushing	1	403400090
2	O-ring	2	169828
3	Back-up Ring (for Item 2)	2	429003000
4	2” 2002 Female Treating Adapter	1	PP1001852
5	Wing Nut	1	403403000

DISCHARGE BRIDLE ASSEMBLY

Order by part number and description. Reference numbers are for your convenience only.

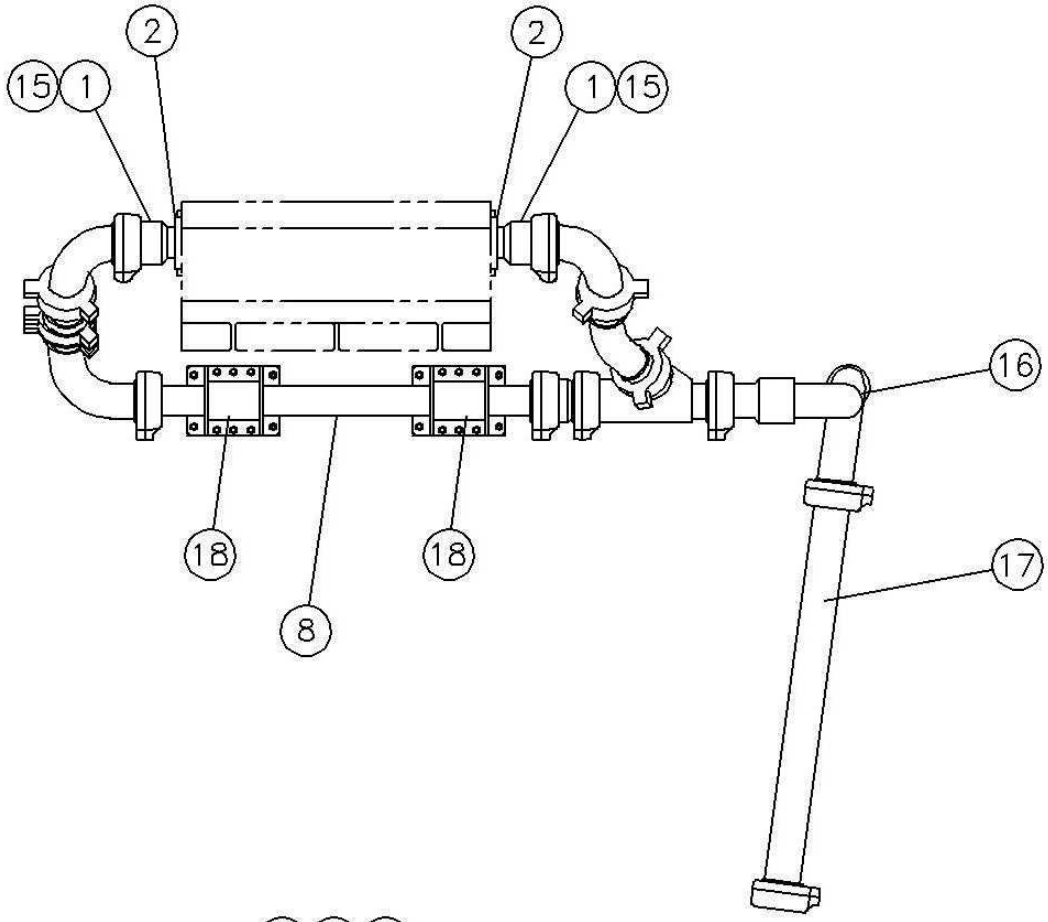

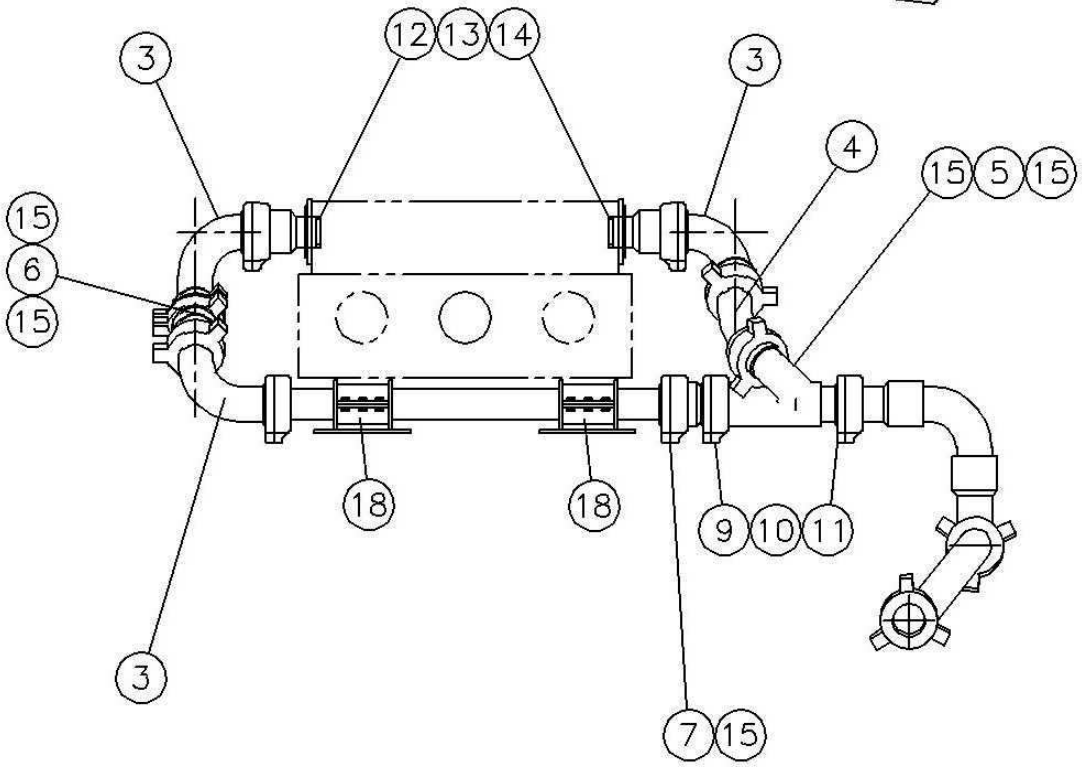

DISCHARGE BRIDLE ASSEMBLY

Order by part number and description. Reference numbers are for your convenience only.

Ref. Assembly Part Number: 560803000

Ref No.	Name of Part	Qty.	Part No.
1	3” 1502 Female Treating Adapter	2	520915090
2	Wing Nut - Lock Nut	2	403403000
3	90 Deg. Elbow w/Wing Nuts	3	520574000
4	30 Deg. Elbow w/Wing Nut	1	520573000
5	3” 1502 Lateral	1	430502090
6	Female Treating Adapter Assembly	1	520916000
7	Male Treating Adapter Assembly	1	479105000
8	Treating Pipe, 46.5” Long	1	479590000
9	Wing Nut Retainer Segments	6	431042090
10	Retaining Ring	2	421067000
11	3” Wing Nut	2	431200090
12	O-ring	2	169828
13	Back-up Ring (for Item 12)	4	429003000
14	Port Bushing	2	403400090
15	Weco Seal	4	449373000
16	Swivel Joint	1	431201000
17	Treating Pipe, 48” Long	1	441524090
18	Pipe Support	2	521007000

SUCTION MANIFOLD ASSEMBLY

Order by part number and description. Reference numbers are for your convenience only.

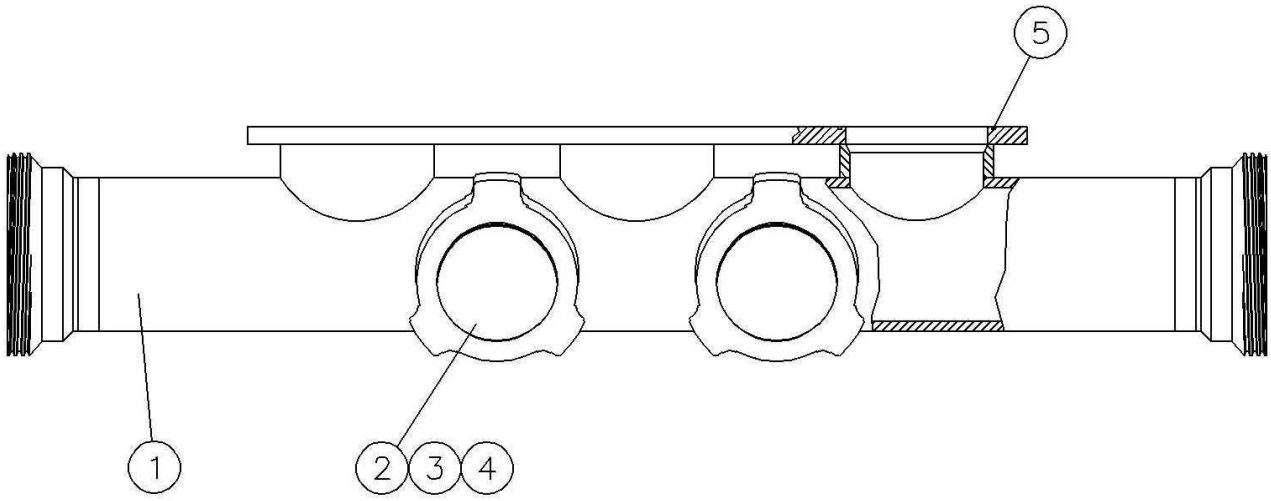

Ref No.	Name of Part	Qty.	Part No.
1	Suction Manifold	1	522191000
2	Plug – Cleanout	2	64EB876
3	Wing Nut – Cleanout	2	64EB875
4	O-ring – Cleanout	2	124642
5	O-ring – Fluid End	3	136236

GWS FLUID END SERVICE TOOLS

Ref No.	Name of Part	Qty.	Part No.
1	PACKING NUT WRENCH		
	ADJUSTABLE PACKING NUT	1	300TWC933
	NON-ADJUSTABLE PACKING NUT	1	200OPB933
2	3” HEX WRENCH	1	342-A-89
3	SLIDE HAMMER WRENCH	1	590PN006
4	SEAT PULLER TOOL KIT (SELECT FROM 3 SIZE OPTIONS BELOW)		
	3.75” – 4.5” MacClatchie Valve Seat Puller Kit *	1	402THD6031
	3.75” – 5.5” Mission and Novatech Valve Seat Puller Kit*	1	402THD6031
	(*Includes the following 3 items)		
	* Seat Puller Jack Assembly	1	102014
	* Puller Head Assembly	1	HG-3
	* Tool Box	1	H-400
	5.5” MacClatchie Valve Seat Puller Kit (*INCLUDES THE FOLLOWING 3)	1	404THD6031
	* Seat Puller Jack Assembly	1	102014
	* Puller Head Assembly	1	HR-4
	* Tool Box	1	H-400
	6.5” Valve Seat Puller Kit (*INCLUDES THE FOLLOWING 3 ITEMS)	1	405THD6031
	* Seat Puller Jack Assembly	1	102014
	* Puller Head Assembly	1	HBR-6
	* Tool Box	1	H-400

For additional information contact your local representative or

Gardner Denver Inc.
4747 South 83rd East Avenue, Tulsa, OK 74145
PH: (918) 664-1151, (800) 637-8099
FAX: (918) 664-6225
www.gardnerdenver.com

Gardner Denver

Specifications subject to change without notice.
Copyright © 2005 Gardner Denver, Inc. Litho in U.S.A.